Self-aligning ball bearings

Cylindrical bore

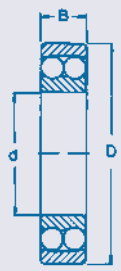

Bore 10 – 35 mm

Dimensions				Abbreviation for		Load ratings		Speed limits	
d	D	B	$r_{1.2}$ min	cylindrical bore	Tapered bore	dyn. C	stat. C_0	Grease	Oil
mm						kN		min^{-1}	
10	30	9	0.6	1200TN	—	5.50	1.53	24,000	30,000
	30	14	0.6	2200TN	—	7.20	2.04	24,000	30,000
12	32	10	0.6	1201TNG	—	5.60	1.27	24,000	30,000
	32	14	0.6	2201ETNG	—	9.00	1.96	20,000	26,000
	37	12	1.0	1301TN	—	9.50	2.16	18,000	22,000
15	35	11	0.6	1202TNG	—	7.50	1.76	20,000	26,000
	35	14	0.6	2202ETNG	—	9.15	2.08	19,000	24,000
	42	13	1.0	1302TN	—	9.50	2.28	17,000	20,000
	42	17	1.0	2302ETNG	—	12.00	2.90	16,000	19,000
17	40	12	0.6	1203TNG	—	8.00	2.04	18,000	22,000
	40	16	0.6	2203ETNG	—	11.40	2.75	16,000	19,000
	47	14	1.0	1303TN	—	12.50	3.20	15,000	18,000
	47	19	1.0	2303TN	—	14.30	3.55	14,000	17,000
20	47	14	1.0	1204TNG	1204KTNGC3	10.00	2.65	15,000	18,000
	47	18	1.0	2204ETNG	2204EKTNGC3	14.30	3.55	14,000	17,000
	52	15	1.1	1304TNG	1304KTNGC3	12.50	3.35	13,000	16,000
	52	21	1.1	2304J	2304KJC3	18.00	4.65	13,000	16,000
25	52	15	1.0	1205TNG	1205KTNGC3	12.20	3.35	13,000	16,000
	52	18	1.0	2205ETNG	2205EKTNGC3	17.00	4.40	12,000	15,000
	62	17	1.1	1305TNG	1305KTNGC3	18.00	5.00	11,000	14,000
	62	24	1.1	2305TNG	2305KTNGC3	24.50	6.55	10,000	13,000
30	62	16	1.0	1206TNG	1206KTNGC3	15.60	4.65	11,000	14,000
	62	20	1.0	2206ETNG	2206EKTNGC3	25.50	6.95	9,500	12,000
	72	19	1.1	1306TNG	1306KTNGC3	21.20	6.30	9,000	11,000
	72	27	1.1	2306TNG	2306KTNGC3	31.50	8.65	8,500	10,000
35	72	17	1.1	1207TNG	1207KTNGC3	16.00	5.20	9,500	12,000
	72	23	1.1	2207ETNG	2207EKTNGC3	32.00	9.00	8,000	9,500
	80	21	1.5	1307TNG	1307KTNGC3	25.00	8.00	8,000	9,500
	80	31	1.5	2307TNG	2307KTNGC3	39.00	11.20	7,500	9,000

Tapered bore (Taper 1:12)

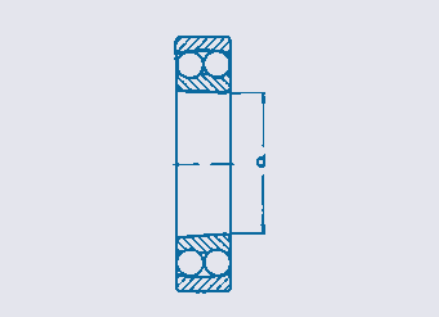

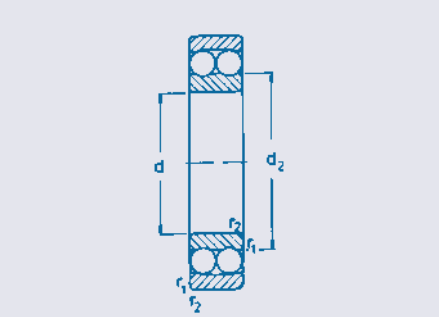

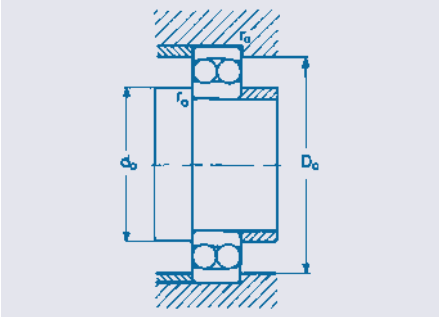

Abutment dimensions			Factors				Weight	Abbreviation
d_a min	D_a max	r_a max	e	Y_1 Fa/Fr ≤ e	Y_2 Fa/fr > e	Y_0	≈	
mm							kg	
14.0	26.0	0.6	0.32	2.0	3.00	2.1	0.034	1200TN
14.0	26.0	0.6	0.66	1.0	1.50	1.0	0.047	2200TN
16.0	28.0	0.6	0.37	1.7	2.60	1.8	0.040	1201TNG
16.0	28.0	0.6	0.53	1.2	1.85	1.3	0.053	2201ETNG
17.0	32.0	1.0	0.35	1.8	2.80	1.9	0.067	1301TN
19.0	31.0	0.6	0.34	1.9	2.90	2.0	0.049	1202TNG
19.0	31.0	0.6	0.46	1.4	2.10	1.4	0.060	2202ETNG
20.0	37.0	1.0	0.35	1.8	2.80	1.9	0.094	1302TN
20.0	37.0	1.0	0.51	1.2	1.90	1.3	0.110	2302ETNG
21.0	36.0	0.6	0.33	1.9	3.00	2.0	0.073	1203TNG
21.0	36.0	0.6	0.46	1.4	2.10	1.4	0.088	2203ETNG
22.0	42.0	1.0	0.32	1.9	3.00	2.0	0.130	1303TN
22.0	42.0	1.0	0.53	1.2	1.90	1.3	0.160	2303TN
25.0	42.0	1.0	0.28	2.2	3.50	2.3	0.120	1204TNG
25.0	42.0	1.0	0.44	1.5	2.20	1.5	0.140	2204ETNG
26.5	45.5	1.0	0.29	2.2	3.30	2.3	0.160	1304TNG
26.5	45.5	1.0	0.51	1.2	1.90	1.3	0.210	2304J
30.0	47.0	1.0	0.27	2.4	3.70	2.5	0.140	1205TNG
30.0	47.0	1.0	0.35	1.8	2.80	1.9	0.160	2205ETNG
31.5	55.5	1.0	0.28	2.3	3.50	2.4	0.260	1305TNG
31.5	55.5	1.0	0.48	1.3	2.00	1.4	0.340	2305TTNG
35.0	57.0	1.0	0.25	2.5	3.90	2.7	0.220	1206TNG
35.0	57.0	1.0	0.30	2.1	3.30	2.2	0.260	2206ETNG
36.5	65.5	1.0	0.26	2.4	3.70	2.5	0.390	1306TNG
36.5	65.5	1.0	0.45	1.4	2.20	1.5	0.500	2306TNG
41.5	65.5	1.0	0.22	2.8	4.30	2.9	0.320	1207TNG
41.5	65.5	1.0	0.30	2.1	3.30	2.2	0.400	2207ETNG
43.0	72.0	1.5	0.26	2.5	3.80	2.6	0.510	1307TNG
43.0	72.0	1.5	0.47	1.4	2.10	1.4	0.680	2307TNG

Self-aligning ball bearings

Cylindrical bore

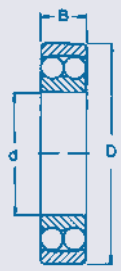

Bore 40 – 75 mm

Dimensions				Abbreviation for		Load ratings		Speed limits	
d	D	B	$r_{1.2}$ min	cylindrical bore	Tapered bore	dyn. C	stat. C_0	Grease	Oil
mm						kN		min^{-1}	
40	80	18	1.1	1208TNG	1208KTNGC3	19.30	6.55	8,500	10,000
	80	23	1.1	2208ETNG	2208EKTNGC3	31.50	9.50	7,500	9,000
	90	23	1.5	1308TNG	1308KTNGC3	29.00	9.65	7,000	8,500
	90	33	1.5	2308TNG	2308KTNGC3	45.00	13.40	6,700	8,000
45	85	19	1.1	1209TNG	1209KTNGC3	22.00	7.35	7,500	9,000
	85	23	1.1	2209ETNG	2209EKTNGC3	28.00	9.00	7,000	8,500
	100	25	1.5	1309TNG	1309KTNGC3	38.00	12.90	6,300	7,500
	100	36	1.5	2309TNG	2309KTNGC3	54.00	16.30	6,000	7,000
50	90	20	1.1	1210TNG	1210KTNGC3	22.80	8.15	7,000	8,500
	90	23	1.1	2210ETNG	2210EKTNGC3	28.00	9.50	6,700	8,000
	110	27	2.0	1310TNG	1310KTNGC3	41.50	14.30	5,600	6,700
	110	40	2.0	2310TNG	2310KTNGC3	64.00	20.00	5,300	6,300
55	100	21	1.5	1211TNG	1211KTNGC3	27.00	10.00	6,300	7,500
	100	25	1.5	2211ETNG	2211EKTNGC3	39.00	12.70	5,600	6,700
	120	29	2.0	1311TNG	1311KTNGC3	51.00	18.00	5,000	6,000
	120	43	2.0	2311TNG	2311KTNGC3	75.00	23.60	4,800	5,600
60	110	22	1.5	1212TNG	1212KTNGC3	30.00	11.60	5,600	6,700
	110	28	1.5	2212ETNG	2212EKTNGC3	47.50	16.60	5,300	6,300
	130	31	2.0	1312J	1312KJC3	57.50	20.80	4,800	5,600
	130	46	2.0	2312J	2312KJC3	88.50	28.30	4,300	5,300
65	120	23	1.5	1213TNG	1213KTNGC3	31.00	12.50	5,300	6,300
	120	31	1.5	2213ETNG	2213EKTNGC3	57.00	19.30	4,500	5,300
	140	33	2.1	1313J	1313KTNGC3	62.50	22.90	4,300	5,300
	140	48	2.1	2313J	2313KTNGC3	96.50	32.50	4,000	4,800
70	125	24	1.5	1214TNG	—	34.50	13.70	5,000	6,000
	125	31	1.5	2214J	—	44.00	17.10	4,500	5,600
	150	35	2.1	1314J	—	67.50	25.10	4,000	5,000
	150	51	2.1	2314J	—	111.00	37.50	3,600	4,300
75	130	25	1.5	1215TNG	1215KTNGC3	39.00	15.60	4,800	5,600
	130	31	1.5	2215J	2215KJC3	44.50	17.80	4,300	5,300
	160	37	2.1	1315J	1315KJC3	80.00	30.00	3,800	4,500
	160	55	2.1	2315J	2315KJC3	125.00	43.00	3,400	4,300

Tapered bore (Taper 1:12)

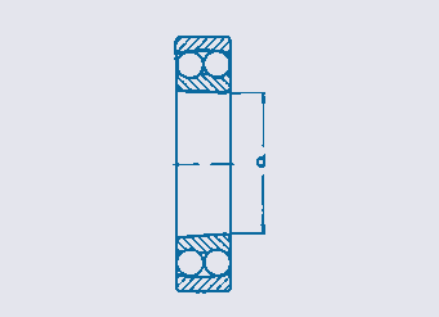

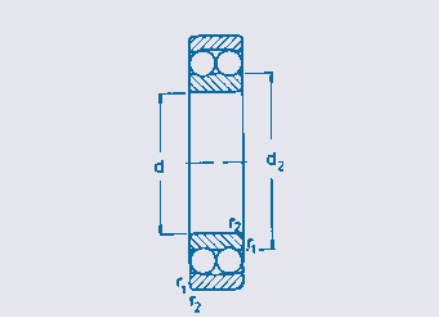

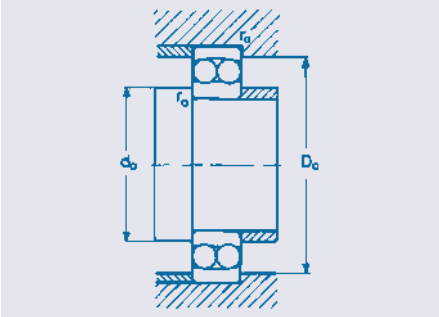

Abutment dimensions			Factors				Weight	Abbreviation
d_a min	D_a max	r_a max	e	Y_1 Fa/Fr ≤ e	Y_2 Fa/fr > e	Y_0	≈	
mm							kg	
46.5	73.5	1.0	0.22	2.9	4.5	3.0	0.42	1208TNG
46.5	73.5	1.0	0.26	2.4	3.8	2.5	0.51	2208ETNG
48.0	82.0	1.5	0.25	2.5	3.9	2.6	0.72	1308TNG
48.0	82.0	1.5	0.43	1.5	2.3	1.5	0.93	1208TNG
51.5	78.5	1.0	0.21	3.0	4.7	3.2	0.47	1209TNG
51.5	78.5	1.0	0.26	2.4	3.8	2.5	0.55	2209ETNG
53.0	92.0	1.5	0.25	2.5	3.9	2.6	0.96	1309TNG
53.0	92.0	1.5	0.43	1.5	2.3	1.6	1.25	2309TNG
56.5	83.5	1.0	0.19	3.2	4.9	3.3	0.53	1210TNG
56.5	83.5	1.0	0.22	2.6	4.1	3.7	0.59	2210ETNG
59.0	101.0	2.0	0.24	2.6	4.0	2.7	1.20	1310TNG
59.0	101.0	2.0	0.43	1.5	2.3	1.5	1.65	2310TNG
63.0	92.0	1.5	0.19	3.3	5.1	3.5	0.71	1211TNG
63.0	92.0	1.5	0.22	2.9	4.5	2.1	0.81	2211ETNG
64.0	111.0	2.0	0.24	2.7	4.1	2.8	1.60	1311TNG
64.0	111.0	2.0	0.42	1.5	2.3	1.6	2.10	2311TNG
68.5	101.5	1.5	0.18	3.5	5.4	3.6	0.90	1212TNG
68.5	101.5	1.5	0.23	2.7	4.2	2.8	1.10	2212ETNG
72.0	118.0	2.0	0.23	2.8	4.3	2.9	1.95	1312TNG
72.0	118.0	2.0	0.40	1.6	2.4	1.7	2.60	2312TNG
73.0	112.0	1.5	0.18	3.6	5.5	3.7	1.15	1213TNG
73.0	112.0	1.5	0.23	2.8	4.3	2.9	1.45	2213ETNG
76.0	128.0	2.0	0.23	2.8	4.3	2.9	2.45	1313J
76.0	128.0	2.0	0.39	1.6	2.5	1.7	3.25	2313J
78.0	116.5	1.5	0.19	3.3	5.1	3.5	1.25	1214TNG
78.0	116.5	1.5	0.26	2.4	3.7	2.5	1.50	2214J
81.0	138.0	2.0	0.22	2.8	4.4	3.0	3.00	1314J
81.0	138.0	2.0	0.38	1.7	2.6	1.8	4.25	2314J
83.5	121.5	1.5	0.17	3.6	5.6	3.8	1.35	1215TNG
83.5	121.5	1.5	0.25	2.5	3.9	2.6	1.60	2215J
87.0	148.0	2.0	0.22	2.8	4.4	3.0	3.55	1315J
87.0	148.0	2.0	0.38	1.6	2.6	1.7	5.15	2315J

Self-aligning ball bearings

With adapter sleeve
Shaft 17 – 50 mm

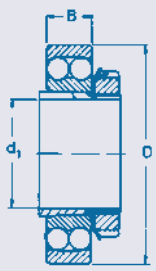

Dimensions				Abbreviation		Load ratings		Speed limits	
d_1	D	B	$r_{1.2}$			dyn.	stat.	Grease	Oil
Shaft			min	Bearing	Sleeve	C	C_0		
mm						kN		min^{-1}	
17	47	14	1.0	1204KTNGC3	H204	10.00	2.65	15,000	18,000
	47	18	1.0	2204EKTNGC3	H304	14.30	3.55	14,000	17,000
	52	15	1.1	1304KTNGC3	H304	12.50	3.35	13,000	16,000
	52	21	1.1	2304KJC3	H2304	18.00	4.65	13,000	16,000
20	52	15	1.0	1205KTNGC3	H205	12.20	3.35	13,000	16,000
	52	18	1.0	2205EKTNGC3	H305	17.00	4.40	12,000	15,000
	62	17	1.1	1305KTNGC3	H305	18.00	5.00	11,000	14,000
	62	24	1.1	2305KTNGC3	H2305	24.50	6.55	10,000	13,000
25	62	16	1.0	1206KTNGC3	H206	15.60	4.65	11,000	14,000
	62	20	1.0	2206EKTNGC3	H306	25.50	6.95	9,500	12,000
	72	19	1.1	1306KTNGC3	H306	21.20	6.30	9,000	11,000
	72	27	1.1	2306KTNGC3	H2306	31.50	8.65	8,500	10,000
30	72	17	1.1	1207KTNGC3	H207	16.00	5.20	9,500	12,000
	72	23	1.1	2207EKTNGC3	H307	32.00	9.00	8,000	9,500
	80	21	1.5	1307KTNGC3	H307	25.00	8.00	8,000	9,500
	80	31	1.5	2307KTNGC3	H2307	39.00	11.20	7,500	9,000
35	80	18	1.1	1208KTNGC3	H208	19.30	6.55	8,500	10,000
	80	23	1.1	2208EKTNGC3	H308	31.50	9.50	7,500	9,000
	90	23	1.5	1308KTNGC3	H308	29.00	9.65	7,000	8,500
	90	33	1.5	2308KTNGC3	H2308	45.00	13.40	6,700	8,000
40	85	19	1.1	1209KTNGC3	H209	22.00	7.35	7,500	9,000
	85	23	1.1	2209EKTNGC3	H309	28.00	9.00	7,000	8,500
	100	25	1.5	1309KTNGC3	H309	38.00	12.90	6,300	7,500
	100	36	1.5	2309KTNGC3	H2309	54.00	16.30	6,000	7,000
45	90	20	1.1	1210KTNGC3	H210	22.90	8.15	7,000	8,500
	90	23	1.1	2210EKTNGC3	H310	28.00	9.50	6,700	8,000
	110	27	2.0	1310KTNGC3	H310	41.50	14.30	5,600	6,700
	110	40	2.0	2310KTNGC3	H2310	64.00	20.00	5,300	6,300
50	100	21	1.5	1211KTNGC3	H211	27.00	10.00	6,300	7,500
	100	25	1.5	2211EKTNGC3	H311	39.00	12.70	5,600	6,700
	120	29	2.0	1311KTNGC3	H311	51.00	18.00	5,000	6,000
	120	43	2.0	2311KTNGC3	H2311	75.00	23.60	4,800	5,600

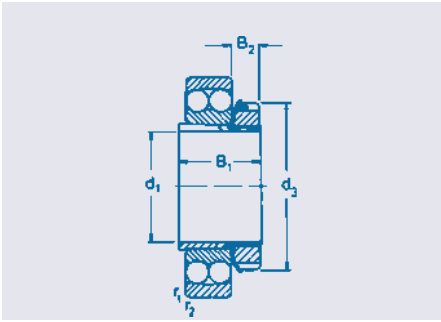

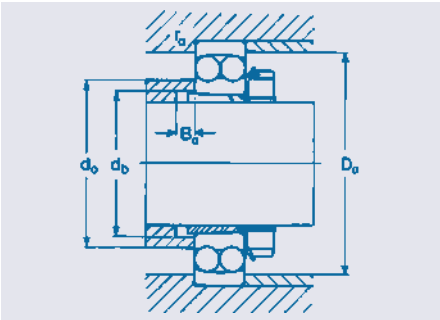

Dimensions			Abutment dimensions					Factors				Weight		Abbreviation
d_3	B_1	B_2	d_a max	d_b min	D_a max	B_a min	r_a max	e	Y_1 Fa/Fr ≤ e	Y_2 Fa/fr > e	Y_0	Bearing	Sleeve	≈
mm			mm									kg		
32	24	7	27	23	42.0	5	1.0	0.28	2.2	3.5	2.3	0.12	0.041	1204KTNGC3
32	28	7	27	23	42.0	5	1.0	0.44	1.5	2.2	1.5	0.14	0.045	2204EKTNGC3
32	28	7	30	23	45.5	8	1.0	0.29	2.2	3.3	2.3	0.16	0.045	1304KTNGC3
32	31	7	28	24	45.5	5	1.0	0.51	1.2	1.9	1.3	0.21	0.049	2304KJC3
38	26	8	32	28	47.0	5	1.0	0.27	2.4	3.7	2.5	0.14	0.070	1205KTNGC3
38	29	8	32	28	47.0	5	1.0	0.35	1.8	2.8	1.9	0.16	0.075	2205EKTNGC3
38	29	8	35	28	55.5	6	1.0	0.28	2.3	3.5	2.4	0.26	0.075	1305KTNGC3
38	35	8	34	30	55.5	5	1.0	0.48	1.3	2.0	1.4	0.34	0.087	2305KTNGC3
45	27	8	38	33	57.0	5	1.0	0.25	2.5	3.9	2.7	0.22	0,100	1206KTNGC3
45	31	8	39	33	57.0	5	1.0	0.30	2.1	3.3	2.2	0.24	0.110	2206EKTNGC3
45	31	8	42	33	65.5	6	1.0	0.26	2.4	3.7	2.5	0.38	0.110	1306KTNGC3
45	38	8	40	35	65.5	5	1.0	0.45	1.4	2.2	1.5	0.49	0.130	2306KTNGC3
52	29	9	45	38	65.5	5	1.0	0.22	2.8	4.3	2.9	0.32	0.130	1207KTNGC3
52	35	9	44	39	65.5	5	1.0	0.30	2.1	3.3	2.2	0.40	0.140	2207EKTNGC3
52	35	9	49	39	72.0	7	1.5	0.26	2.5	3.8	2.6	0.50	0.140	1307KTNGC3
52	43	9	45	40	72.0	5	1.5	0.47	1.4	2.1	1.4	0.66	0.170	2307KTNGC3
58	31	10	52	43	73.5	6	1.0	0.22	2.9	4.5	3.0	0.41	0.170	1208KTNGC3
58	36	10	50	44	73.5	6	1.0	0.26	2.4	3.8	2.5	0.49	0.190	2208EKTNGC3
58	36	10	55	44	82.0	6	1.5	0.25	2.5	3.9	2.6	0.70	0.190	1308KTNGC3
58	46	10	51	45	82.0	6	1.5	0.43	1.5	2.3	1.5	0.90	0.220	2308KTNGC3
65	33	11	57	48	78.5	6	1.0	0.21	3.0	4.7	3.2	0.46	0.230	1209KTNGC3
65	39	11	56	50	78.5	8	1.0	0.26	2.4	3.8	2.5	0.53	0.250	2209EKTNGC3
65	39	11	61	50	92.0	6	1.5	0.25	2.5	3.9	2.6	0.94	0.250	1309KTNGC3
65	50	11	57	50	92.0	6	1.5	0.43	1.5	2.3	1.6	1.20	0.280	2309KTNGC3
70	35	12	62	53	83.5	6	1.0	0.20	3.2	4.9	3.3	0.52	0.270	1210KTNGC3
70	42	12	61	55	83.5	10	1.0	0.24	2.6	4.1	2.7	0.58	0.300	2210EKTNGC3
70	42	12	68	55	101.0	6	2.0	0.24	2.6	4.0	2.7	1.20	0.300	1310KTNGC3
70	55	12	63	56	101.0	6	2.0	0.43	1.5	2.3	1.5	1.60	0.360	2310KTNGC3
75	37	12	69	60	92.0	7	1.5	0.19	3.3	5.1	3.5	0.69	0.310	1211KTNGC3
75	45	12	68	60	92.0	11	1.5	0.22	2.9	4.5	2.1	0.79	0.390	2211EKTNGC3
75	45	12	74	60	111.0	7	2.0	0.24	2.7	4.1	2.8	1.55	0.390	1311KTNGC3
75	59	12	69	61	111.0	7	2.0	0.42	1.5	2.3	1.6	2.05	0.420	2311KTNGC3

Self-aligning ball bearings

With adapter sleeve
Shaft 55 – 65 mm

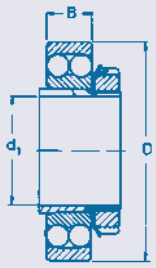

Dimensions				Abbreviation		Load ratings		Speed limits	
d_1	D	B	$r_{1.2}$			dyn.	stat.	Grease	Oil
Shaft			min	Bearing	Sleeve	C	C_0		
mm						kN		min^{-1}	
55	110	22	1.5	1212KTNGC3	H212	30.0	11.6	5,600	6,700
	110	28	1.5	2212EKTNGC3	H312	47.5	16.6	5,300	6,300
	130	31	2.0	1312KJC3	H312	57.5	20.8	4,800	5,600
	130	46	2.0	2312KJC3	H2312	88.5	28.3	4,300	5,300
60	120	23	1.5	1213KTNGC3	H213	31.0	12.5	5,300	6,300
	120	31	1.5	2213EKTNGC3	H313	57.0	19.3	4,500	5,300
	140	33	2.1	1313KJC3	H313	62.5	22.9	4,300	5,300
	140	48	2.1	2313KJC3	H2313	96.5	32.5	4,000	4,800
65	130	25	1.5	1215KTNGC3	H215	39.0	15.6	4,800	5,600
	130	31	1.5	2215KJC3	H315	44.5	17.8	4,300	5,300
	160	37	2.1	1315KJC3	H315	80.0	30.0	3,800	4,500
	160	55	2.1	2315KJC3	H2315	125.0	43.0	3,400	4,300

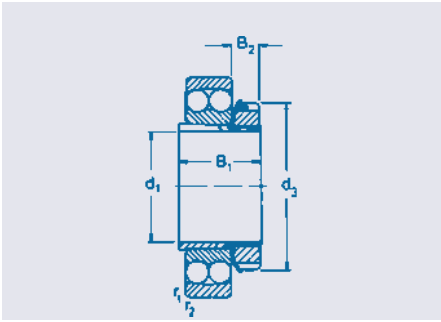

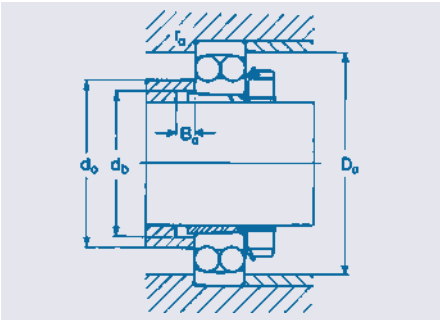

Dimensions			Abutment dimensions					Factors				Weight		Abbreviation
d_3	B_1	B_2	d_a max	d_b min	D_a max	B_a min	r_a max	e	Y_1 Fa/Fr ≤ e	Y_2 Fa/fr > e	Y_0	Bearing	Sleeve	≈
mm			mm									kg		
80	38	13	75	64	102	7	1.5	0.18	3.5	5.4	3.6	0.90	0.35	1212KTNGC3
80	47	13	73	65	102	9	1.5	0.23	2.7	4.2	2.8	1.10	0.39	2212EKTNGC3
80	47	13	83	65	119	7	2.0	0.23	2.8	4.3	2.9	1.95	0.39	1312KJC3
80	62	13	74	66	119	7	2.0	0.40	1.6	2.4	1.7	2.60	0.49	2312KJC3
85	40	14	83	70	112	7	1.5	0.18	3.6	5.5	3.7	1.15	0.40	1213KTNGC3
85	50	14	79	70	112	9	1.5	0.23	2.8	4.3	2.9	1.45	0.46	2213EKTNGC3
85	50	14	89	70	129	7	2.0	0.23	2.8	4.3	2.9	2.45	0.46	1313KJC3
85	65	14	82	72	129	7	2.0	0.39	1.6	2.5	1.7	3.25	0.55	2313KJC3
98	43	15	92	80	122	7	1.5	0.17	3.6	5.6	3.8	1.35	0.71	1215KTNGC3
98	55	15	90	80	122	13	1.5	0.25	2.5	3.9	2.6	1.60	0.83	2215KJC3
98	55	15	100	80	149	7	2.0	0.22	2.8	4.4	3.0	3.55	0.83	1315KJC3
98	73	15	94	82	149	7	2.0	0.38	1.6	2.6	1.7	5.15	1.05	2315KJC3